SXC SERIES

105°C, Overvoltage Vent Operation Facility, Snap-in Terminal Type

♦FEATURES

- Load Life : 105°C 2000 hours.
- This series has specification of vent operation in overvoltage situation. Please consult us for any further details.

♦SPECIFICATIONS

Items	Characteristics
Category Temperature Range	-25~+105°C
Rated Voltage Range	200V.DC, 400V.DC
Capacitance Tolerance	±20%(20°C,120Hz)
Leakage Current(MAX)	$I=3\sqrt{CV}$ (After 5 minutes application of rated voltage) I=Leakage Current(μA) V=Rated Voltage(V) C=Rated Capacitance(μF)
Dissipation Factor(MAX)	0.15(20°C,120Hz)
Impedance Ratio(MAX)	(120Hz) Rated Voltage(V): 200 / 400 Z(-25°C)/Z(20°C): 3 / 8
Endurance	After applying rated voltage with rated ripple current for 2000hrs at 105°C, the capacitors shall meet the following requirements. Capacitance Change: Within ±20% of the initial value. Dissipation Factor: Not more than 200% of the specified value. Leakage Current: Not more than the specified value.

♦MULTIPLIER FOR RIPPLE CURRENT

Frequency coefficient

Frequency(Hz)		60(50)	120	500	1k	10k≦
Coefficient	200WV	0.80	1.00	1.10	1.14	1.18
	400WV	0.80	1.00	1.05	1.10	1.15

♦PART NUMBER

□□□	SXC	□□□□□	□	OOE	□□	DxL
Rated Voltage	Series	Rated Capacitance	Capacitance Tolerance	Option	Terminal Code	Case Size

♦Option

	Code
without plate	OOE
with plate	Blank

♦DIMENSIONS

(mm)

SN [4(3.5)mm] terminal type

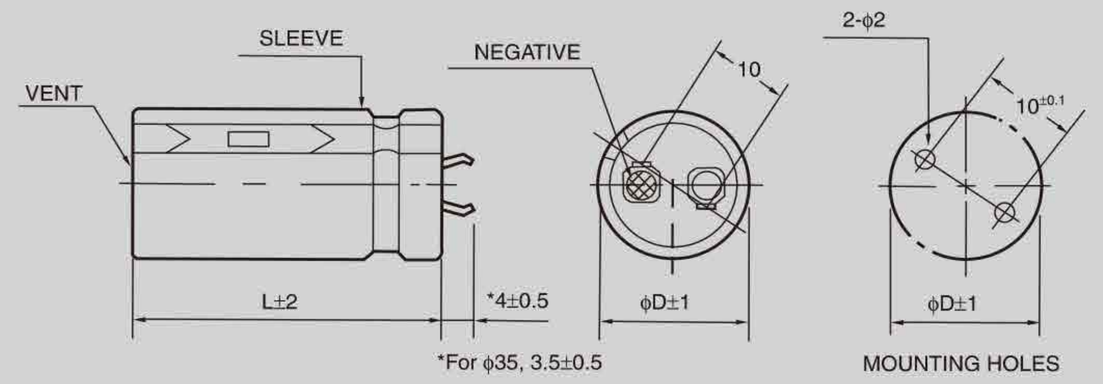

♦STANDARD SIZE, RATED RIPPLE CURRENT

WV / ØD / Cap(µF)	200									
	ø20		ø22		ø25		ø30		ø35	
82	20x20	0.42								
100	20x20	0.47	22x20	0.51						
120	20x20	0.52	22x20	0.56						
150	20x25	0.69	22x25	0.69	25x20	0.63				
180	20x25	0.75	22x25	0.75	25x20	0.70				
220	20x30	0.87	22x25	0.88	25x25	0.88	30x20	0.85		
270	20x35	1.00	22x25	0.99	25x25	0.99	30x20	0.95		
330	20x40	1.20	22x30	1.20	25x25	1.20	30x20 30x25	1.05 1.20	35x20	1.08
390			22x35	1.30	25x30	1.34	30x25	1.30	35x20	1.15
470			22x40	1.44	25x30	1.44	30x25	1.48	35x25	1.48
560			22x45	1.60	25x35	1.60	30x30	1.60	35x25	1.58
680					25x40	1.76	30x30	1.74	35x25	1.74
820							30x35	2.11	35x30	2.10
1000							30x45	2.40	35x30 35x35	2.30 2.30
1200									35x35 35x40	2.65 2.65
1500									35x45	3.08

WV / ØD / Cap(µF)	400									
	ø20		ø22		ø25		ø30		ø35	
22	20x20	0.20								
27	20x20	0.22	22x20	0.23						
33	20x20	0.25	22x20	0.25						
39	20x25	0.35	22x20	0.28	25x20	0.30				
47	20x25	0.39	22x25	0.39	25x20	0.34				
56	20x30	0.44	22x25	0.45	25x20 25x25	0.39 0.45	30x20	0.41		
68	20x35	0.51	22x25	0.49	25x25	0.49	30x20	0.45		
82	20x40	0.57	22x30	0.56	25x25	0.56	30x20 30x25	0.50 0.56	35x20	0.51
100			22x35	0.62	25x30	0.61	30x25	0.59	35x20	0.54
120			22x40	0.73	25x30	0.73	30x25	0.73	35x20	0.61
150			22x45	0.85	25x35	0.85	30x30	0.79	35x25	0.78
180					25x40	0.94	30x30	0.95	35x25	0.95
220					25x45	1.07	30x35	1.24	35x30	1.24
270							30x35 30x40	1.35 1.30	35x35	1.28
330							30x45	1.47	35x35	1.41
390									35x40	1.59
470									35x45	1.87

Ripple Current (A r.m.s./120Hz·105°C)

Case Size øDxL(mm)